CARDIO COMFORT PACER

OWNER'S MANUAL	P. 2-7
BETRIEBSANLEITUNG	S. 8-14
MODE D'EMPLOI	P. 15-21
HANDLEIDING	P. 22-28
MANUALE D'USO	P. 29-35
MANUAL DEL USUARIO	P. 36-42
BRUKSANVISNING	S. 43-48
KÄYTTÖOHJE	S. 49-54

SERIAL NUMBER
SERIENNUMMER
NUMERO DE SERIE
SERIENUMMER
NUMERO DI SERIE
NÚMERO DE SERIE
SERIENNUMMER
SARJANUMERO

BREMSHEY SPORT®

CONTENTS

ASSEMBLY....3, 56
ADJUSTMENTS....3
EXERCISING....4
CONSOLE....5
TRANSPORT AND STORAGE....7
MAINTENANCE....7
MALFUNCTIONS....7
TECHNICAL SPECIFICATIONS....7

IMPORTATNT SAFETY INSTRUCTIONS

Read this guide carefully before assembling, using or servicing your fitness equipment. Please keep the guide somewhere safe; it will provide you now and in the future with the information you need to use and maintain your equipment. Always follow these instructions with care. Please note that the warranty does not cover damage due to transportation or not following of adjustment or maintenance instructions described in this manual.

NOTE ABOUT YOUR HEALTH

• Before you start any training, consult a physician to check your health condition.

• If you experience nausea, dizziness or other abnormal symptoms while exercising, stop your workout immediately and consult a physician.

• To avoid muscular pain and strain, begin each workout by warming up and end it by cooling down (slow pedalling at low resistance). Don't forget to stretch at the end of the workout.

NOTE ABOUT THE EXERCISE ENVIRONMENT

• The equipment is not to be used outdoors.

• Place the equipment on a firm, level surface. Place the equipment on a protective base to avoid any damages to the floor beneath the equipment.

• Make sure that the exercise environment has adequate ventilation. To avoid catching cold, do not exercise in a draughty place.

• In training, the equipment tolerates an environment measuring +10°C to +35°C. The equipment can be stored in temperatures ranging between -15°C and +40°C. Air humidity in the training or storage environment must never exceed 90 %.

NOTE ABOUT USING THE EQUIPMENT

• If children are allowed to use the equipment, they should be supervised and taught how to use the equipment properly, keeping in mind the child's physical and mental development and their personality. Also make sure that pet animals keep a safe distance to the product when it is transporting or used for training.

• Before you start using the equipment, make sure that it functions correctly in every way. Do not use a defective piece of equipment.

• Press the keys with the tip of the finger; your nails may damage the key membrane.

• Never lean on the meter.

• Never remove the side covers. Do not step on the frame casing.

• Only one person may use the equipment at a time.

• Wear appropriate clothing and shoes when exercising.

• Protect the meter from sunlight and always dry the surface of the meter if there are drops of sweat on it.

• The equipment must not be used by persons weighing over 135 kg/298 lbs.

• The equipment has been designed for home use. The Bremshey Sport warranty applies only to defects and malfunctions in home use (24 months). Further information on warranty terms can be obtained from your national Bremshey Sport distributor. Please note that the warranty terms may vary from one country to another.

• Do not attempt any servicing or adjustments other than those described in this guide. Everything else must be left to someone familiar with the maintenance of electromechanical equipments and authorised under the laws of the country in question to carry out maintenance and repair work.

NOTE ABOUT SAFETY FOR UNITS WITH ELECTRICAL POWER

Before connecting the equipment to a power source, make sure that the local voltage matches that indicated on the type plate: the

Cardio Comfort Pacer 2007_PUBLIS2 2
13.7.2007 11:01:36

equipment operates at either 230 V or 115 V (North American version). NOTE! The equipment must be connected to a grounded wall socket. Do not use extension wires when connecting the equipment to the power source. Always switch off the power and unplug the equipment from the electrical outlet immediately after using!

To reduce the risk of burns, fire, electric shock or injury to persons:

• The equipment should never be left unattended when plugged in. Unplug the equipment from the outlet when not in use, before carrying out any maintenance or repair procedures, and before moving the unit.

• Do not operate the equipment under a blanket or other combustive material. Excessive heating can occur and cause fire, electric shock or injury to persons.

• Do not connect the equipment to a power source, or operate the equipment if there is any sort of damage to the power cord or the unit itself.

• Do not connect the equipment to a power source or operate the equipment outdoors or in damp locations.

• Keep the power cord away from hot objects.

• Do not route the power cord beneath a carper or place any objects on the cord. Also make sure that the power cord does not run underneath the equipment.

• Do not alter (for example lengthen) the cord between the transformer and the unit.

NOTE ABOUT ASSEMBLING THE EQUIPMENT

Start by unpacking the equipment. The detailed assembly instructions can be found at the back of this guide. Follow the instructions in given order.

Before assembly, check the contents of the package. If a part is missing, please contact your dealer with the model, equipment serial no. and spare part no. of the missing part. You'll find a spare part list at the back of this guide. The hardware kit contents are marked with * in the spare parts list. The directions left, right, front and back are defined as seen from the exercising position. Keep the assembly tools, as you may need them e.g. for adjusting the equipment. Note that two people are needed for the assembly.

The packaging includes a silicate bag for absorbing moisture during storage and transportation. Please dispose of the bag once you have unpacked the equipment. Allow at least 100 cm of clearance around the equipment. We also recommend opening the package and assembling the product on a protective base.

SAVE THIS INSTRUCTION MANUAL!

ADJUSTMENTS

CORRECT EXERCISE POSITION

In order to find a suitable exercise position, you can adjust the distance of the seat from the pedals. Always make sure before beginning exercising that your exercise position is correct.

1. Place your feet on the pedals.
2. Turn the seat adjustment knob anti-clockwise and pull the knob outwards so that the seat can be moved freely.
3. Push the seat to a suitable distance; the ball of your foot should reach the pedal when your leg is almost fully extended and when the pedal is at its furthermost position from the seat. Check the suitability of the distance by pedalling anti-clockwise.
4. Release the knob when the distance is correct; the seat will click into position.
5. Tighten the locking knob by turning it clockwise.

You can select the inclination of the backrest to uit your own preferences as follows:

1. Go behind the equipment.
2. Pull the backrest inclination adjustment knob outwards so that the backrest can be moved freely.
3. Select the desired inclination.
4. Release the knob when the inclination is correct; the backrest will click into position.

NOTE! Always make sure that the locking knob is properly fastened before starting to exercise!

HANDLEBAR SETUP

Loosen the locking screws on the front of the handlebar support and find the right angle at which to position the handlebar. Tighten the locking screws.

Cardio Comfort Pacer 2007_PUBLIS3 3
13.7.2007 11:01:36

NOTE! Always make sure that the locking knob is properly fastened before starting to exercise!

CONSOLE INCLINATION ADJUSTMENT

Set the inclination of the meter so that it corresponds to your height and exercise position.

ADJUSTMENT OF SUPPORT FEET

If the equipment is not stable, adjust the adjustment screws below the support feet as necessary.

EXERCISING

If the product is not stable, adjust the stabilizing screws under the rear support appropriately.

EXERCISE LEVEL

Working out with this device is excellent aerobic exercise, the principle being that the exercise should be suitably light, but of long duration. Aerobic exercise is based on improving the body's maximum oxygen uptake, which in turn improves endurance and fitness. The ability of the body to burn fat as a fuel is directly dependent on its oxygen-uptake capacity. Aerobic exercise should be above all pleasant. You should work up a light sweat but you should not get out of breath during the workout.

You should exercise at least three times a week, 30 minutes at a time, to reach a basic fitness level. Maintaining this level requires a few exercise sessions each week. Once the basic condition has been reached, it is easily improved, simply by increasing the number of exercise sessions. You should start slowly at a low pedaling speed and low resistance, because for an overweight person strenuous exercise may subject the heart and circulatory system to excessive strain. As fitness improves, resistance and pedaling speed can be increased gradually.

HEART RATE

No matter what your goal, you'll get the best results by training at the right level of effort, and the best measure is your own heart rate.

HEART RATE MEASUREMENT WITH HANDGRIP SENSORS

Heart rate is measured from the hands using the sensors located on the handlebars. The sensors measure electric impulses, which are formed when a person's heart beats. Measurement is started by touching both handlebar sensors simultaneously. To ensure reliable heart rate measurement, skin must be slightly moist and skin contact with sensors must be continuous. If skin is too dry or too wet, the heart rate measurement operation from the hands is less reliable. Try to keep your upper body and palms relaxed and still.

TELEMETRIC HEART RATE MEASUREMENT

The most reliable heart rate measurement is achieved with a telemetric device, in which the electrodes of the transmitter fastened to the chest transmit the pulses from the heart to the console by means of an electromagnetic field.

NOTE! If you are fitted with a pacemaker, please consult a physician before using a wireless heart rate monitor.

If you want to measure your heart rate this way during your workout, moisten the grooved electrodes on the transmitter belt with saliva or water. Fasten the transmitter just below the chest with the elastic belt, firmly enough so that the electrodes remain in contact with the skin while exercising, but not so tight that normal breathing is prevented. If you wear the transmitter and belt over a light shirt, moisten the shirt slightly at the points where the electrodes touch the shirt. The transmitter automatically transmits the heart rate reading to the console up to a distance of about 1 m.

If the electrode surfaces are not moist, the heart-rate reading will not appear on the display. If the electrodes are dry, they must be moistened again. Allow the electrodes warm up properly to ensure accurate heart rate measurement. If there are several telemetric heart rate measurement devices next to each other, the distance between them should be at least 1.5 m. Similarly, if there is only one receiver and several transmitters in use, only one person with a transmitter should be within transmission range. The transmitter is switched to an active state only when it is being used for measurement. Sweat and other moisture can, however, keep the transmitter in an active state and waste battery energy. Therefore it is important to dry the electrodes carefully after use.

When selecting training attire, please note that some fibres used in clothes (e.g. polyester, polyamide) create static electricity, which may prevent reliable heart rate measurement. Please note that a mobile phone, television and other

Cardio Comfort Pacer 2007_PUBLIS4 4
13.7.2007 11:01:36

electrical appliances form an electromagnetic field around them, which will cause problems in heart rate measurement.

First find your maximum heart rate i.e. where the rate doesn't increase with added effort. If you don't know your maximum heart rate, please use the following formula as a guide:

220 - AGE

These are average values and the maximum varies from person to person. The maximum heart-rate diminishes on average by one point per year. If you belong to a risk group, ask a doctor to measure your maximum heart rate for you.

We have defined three different heart-rate zones to help you with targeted training.

BEGINNER: 50-60 % of maximum heart-rate

Also suitable for weight-watchers, convalescents and those who haven't exercised for a long time. Three sessions a week of at least a half-hour each is recommended. Regular exercise considerably improves beginners' respiratory and circulatory performance and you will quickly feel your improvement.

TRAINER: 60-70 % of maximum heart-rate

Perfect for improving and maintaining fitness. Even reasonable effort develops the heart and lungs effectively, training for a minimum of 30 minutes at least three times a week. To improve your condition still further, increase either frequency or effort, but not both at the same time!

ACTIVE TRAINER: 70-80 % of maximum heart-rate

Exercise at this level suits only the fittest and presupposes long-endurance workouts

CONSOLE

BUTTONS

1. SELECTION DIAL
The selection dial functions in two ways:

A) Rotating the dial (+ / -). By rotating the dial clockwise, you can scroll the menus to the right, and increase values or resistance. By rotating the dial counter-clockwise, you can scroll the menus to the left, and decrease values or resistance.

B) Pressing the dial (ENTER). By pressing the dial, you can accept the selection you made when rotating the dial.

2. START/STOP
Starts, pauses, and stops training. During training, pressing this button once activates the pause mode. Pressing the button again starts the program again.

3. RESET
Single push: return to the program menu. Long push: restarts the meter.

4. RECOVERY
Calculates your recovery heart rate index.

DISPLAY

Small window: Time (mm:ss), speed (km/h or ml/h), RPM (revolutions per min), distance (km or ml), energy consumption (kcal), heart rate (bpm) and power (W) are displayed.

Big window: Starts to automatically scan between the values of time – speed – RPM – distance – energy – heart rate – power every 6 seconds. Scanning can be stopped by pressing ENTER button. By pressing ENTER again you can change the big window to display information for the next value.

PROGRAMS

1. MANUAL PROGRAM
Set target time and/or distance and/or energy consumption and/or upper heart rate limit by using the SELECTION DIAL.

Start training by pressing START/STOP button.

If you have set target/targets, the target/targets start to count down. Adjust resistance with SELECTION DIAL.

2. PRESET PROGRAMS
Preset program profile is shown for two seconds while programs are browsed.
Select desired preset program by using the SELECTION DIAL.

Set time for training and/or target distance and/or energy and/or upper heart rate limit by SELECTION DIAL.

Start training by pressing START/STOP button.

If you have set target/targets, the target/targets start to count down. During training you can scale the load by SELECTION DIAL.

3. USER PROGRAM
The program profile used last time is displayed. You can either start training with your personal memorized training targets by pressing START/STOP or modify the program. The program

Cardio Comfort Pacer 2007_PUBLIS5 5
13.7.2007 11:01:36

profile bar (1/20) that can now be modified blinks. If you want to change, modify the blinking bar and confirm. Next bar will blink. After the last bar, the display switches back to the first bar. By pressing the ENTER button for 2 seconds you can finish the profile modifying. Now program is ready with your memorized personal training data (time, distance, energy targets and heart rate limit). Modify your targets if needed. Start training by pressing START/STOP button.

If you have set target/targets, the target/targets start to count down. During training you can scale the load by SELECTION DIAL

4. HEART RATE CONTROL (H.R.C.)

Select your age and confirm. Select between four different training intensities (55%, 75%, 90% or TARGET.) By selecting TARGET you can insert target heart rate.

Start training by pressing START/STOP button. If you have set target/targets, the target/targets start to count down.

During the training the equipment will automatically adjust the resistance so that your heart rate target will be reached and maintained.

5. CONSTANT WATT

Set target power in watts and target time and/ or distance and/or energy consumption and/or upper heart rate limit by SELECTION DIAL.

Start training by pressing START/STOP button.

If you have set target/targets, the target/targets start to count down. During training the equipment will adjust resistance dependently on your pedaling speed, so that target power level is achieved and maintained. You can change the target power by SELECTION DIAL.

6. RECOVERY

Start the recovery calculation after training by pressing RECOVERY button. Recovey heart rate calculation can be started only if the heart rate measurement is activated and the heart rate value is shown on the display The measurement takes 60 seconds. After 60 seconds, the display shows your recovery index F1-F6 (F1 = best result). To get back to main menu, press RECOVERY button once again.

SETTING USER DATA

Right after restarting the meter you can choose the user. Select the user and confirm. Personal exercise data (time, distance, energy, heart rate limit and age) will be memorized and recalled as defaults every time when the user is selected.

ADDITIONAL NOTES

1. For speed and distance you can choose either metric or English units by using the KM/ML switch located on the back cover of the meter. The power cord has to be unplugged and replugged to apply the change.

2. If you are not training and buttons are not pressed, the meter switches into the Sleep mode after about four minutes. Room temperature is displayed.

3. Training is paused for a maximum of 4 minutes by pressing the START/STOP button. Pressing the button again allows you to continue the paused training session using the previous training data.

4. Entering training targets (time, distance, energy, heart rate limit) is possible only in the STOP mode (not during training).

5. This equipment cannot be used for therapeutic purposes.

6. Energy consumption is calculated based on average values. The energy expenditure is displayed in kilocalories. To convert this into joules, use the formula: 1 Kcal = 4.187 KJ.

7. If you are training with heart rate measurement (either chest belt or handgrip heart rate) you can set maximum heart rate limit. When limit is exceeded while training meter will give alarm beeps.

8. Preset programs are divided into 20 steps. Duration of the one step depends on the time set for the whole training. If time is not set, duration of one step will be 100 m in distance.

9. If you have set targets to count down, a signal sounds and training automatically stops when any of target reaches zero. You can restart training by pressing START/STOP.

10. Note that recovery index is in relation to the heart rate frequency in both the beginning and the end of the measurement.

11. In H.R.C program heart rate target ranges (55%, 75% and 90%) are calculated as percent from your age predicted maximum heart rate (calculation formula: maximum heart rate = 220 – age).

Cardio Comfort Pacer 2007_PUBLIS6 6
13.7.2007 11:01:37

12. Automatic adjustment of the resistance during H.R.C program occurs upwards every 30 seconds and downwards every 15 seconds, if needed.

TRANSPORT AND STORAGE

Please follow these instructions when carrying and moving the equipment, because lifting it incorrectly may strain your back or risk other accidents:

Go behind the equipment. By holding onto the back part of the frame and the seat handlebar, incline the equipment forward. We recommend that you use a protective base when transporting the equipment.

To prevent the equipment malfunctioning, store in a dry place with as little temperature variation as possible and protected from dust.

MAINTENANCE

The equipment requires very little maintenance. Check, however, from time-to-time that all screws and nuts are tight.

- After exercising, clean the equipment with a soft, absorbent cloth. Do not use solvents.
- Never remove the equipment's protective casing.

MALFUNCTIONS

NOTE! Despite continuous quality control, defects and malfunctions caused by individual components may occur in the equipment. In most cases it's unnecessary to take the whole device in for repair, as it's usually sufficient to replace the defective part. Always give the model, serial number of your equipment and in case of malfunctions also conditions of use, nature of malfunction and any error code.

When you encounter unusual behavior from the device, contact your local Bremshey Sport dealer for service.

If you require spare parts, always give the model, serial number of your equipment and the spare part number for the part you need. The spare part list is at the back of this manual. Use only spare parts mentioned in the spare part list.

TECHNICAL SPECIFICATIONS

Length .....162 cm
Width .....69 cm
Height.....119 cm
Weight ..... 50 kg

The Cardio Comfort-Pacer meets the requirements of the EU's EMC Directives on electromagnetic compatibility (89/336/EEC). This product therefore carries the CE label. The Cardio Comfort-Pacer meets EN precision and safety standards (EN-957).

Due to our continuous policy of product development, Bremshey Sport reserves the right to change specifications without notice.

NOTE! The instructions must be followed carefully in the assembly, use and maintenance of your equipment. The warranty does not cover damage due to negligence of the assembly, adjustment and maintenance instructions described herein. Changes or modifications not expressly approved by Bremshey Sport will void the user's authority to operate the equipment and any warranty!

We wish you many enjoyable trainings!

Cardio Comfort Pacer 2007_PUBLIS7 7
13.7.2007 11:01:37

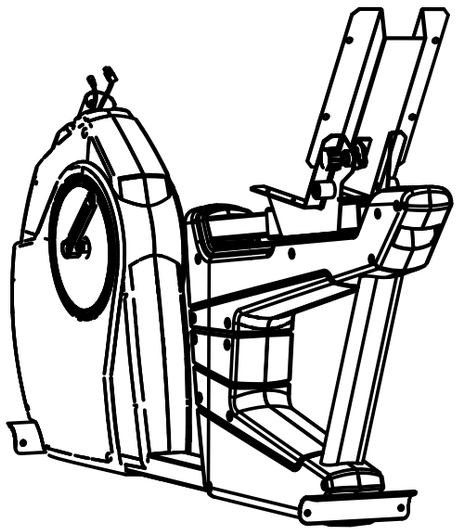	1	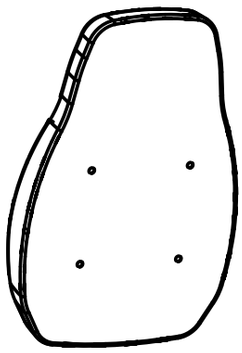	1
			1
	1		1
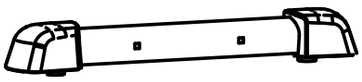	1		1
	1/1		1
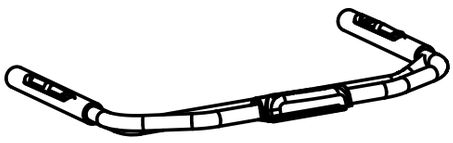	1	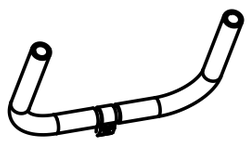	1
	1		1

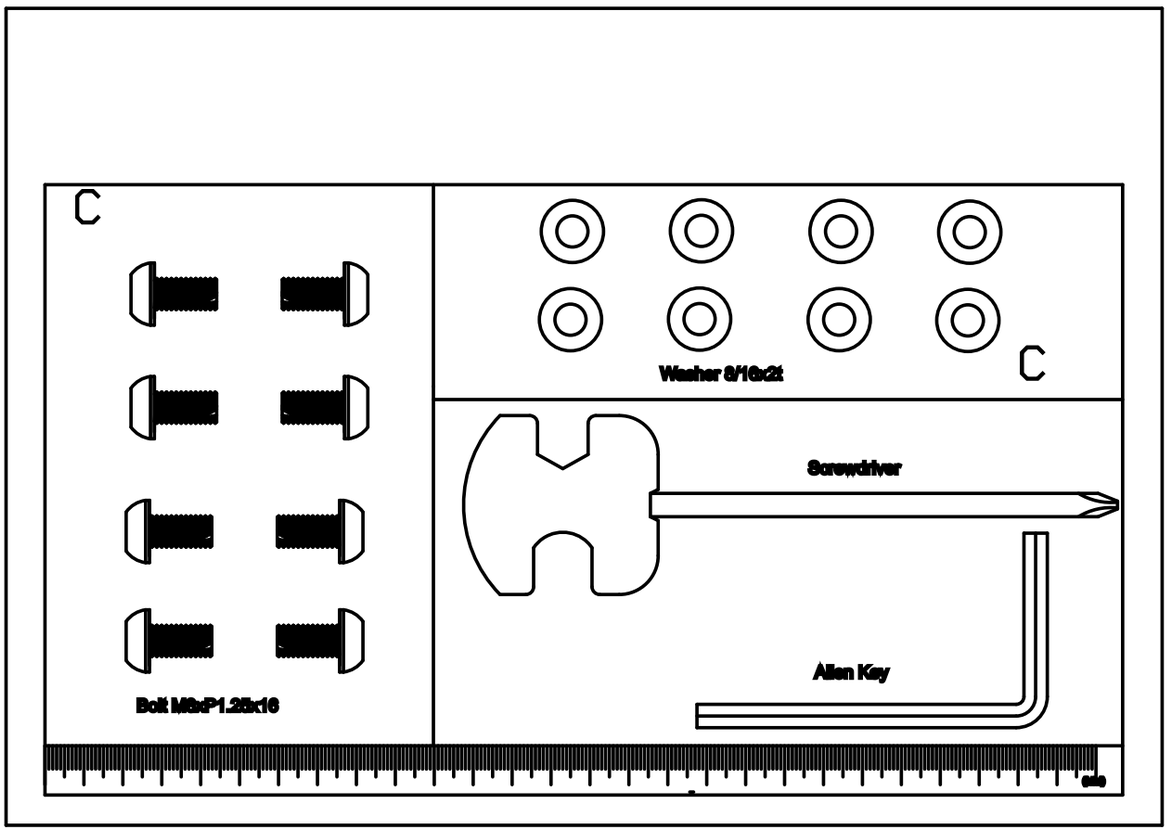
C
Bolt M8xP1.25x16
Washer 8/16x2t
C
Screwdriver
Allen Key

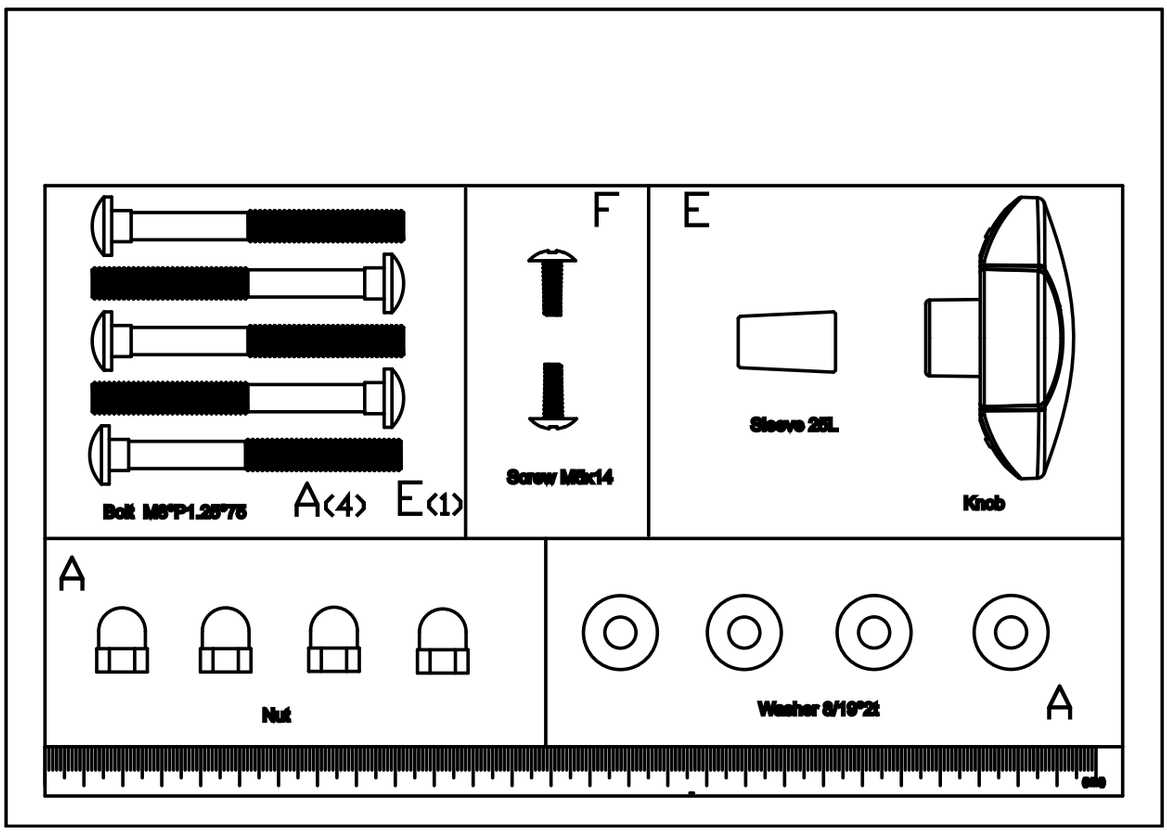
Bolt M8*P1.25*75
A(4) E(1)
F
Screw M8x14
E
Sleeve 25L
Knob
A
Nut
Washer 8/19*2t
A

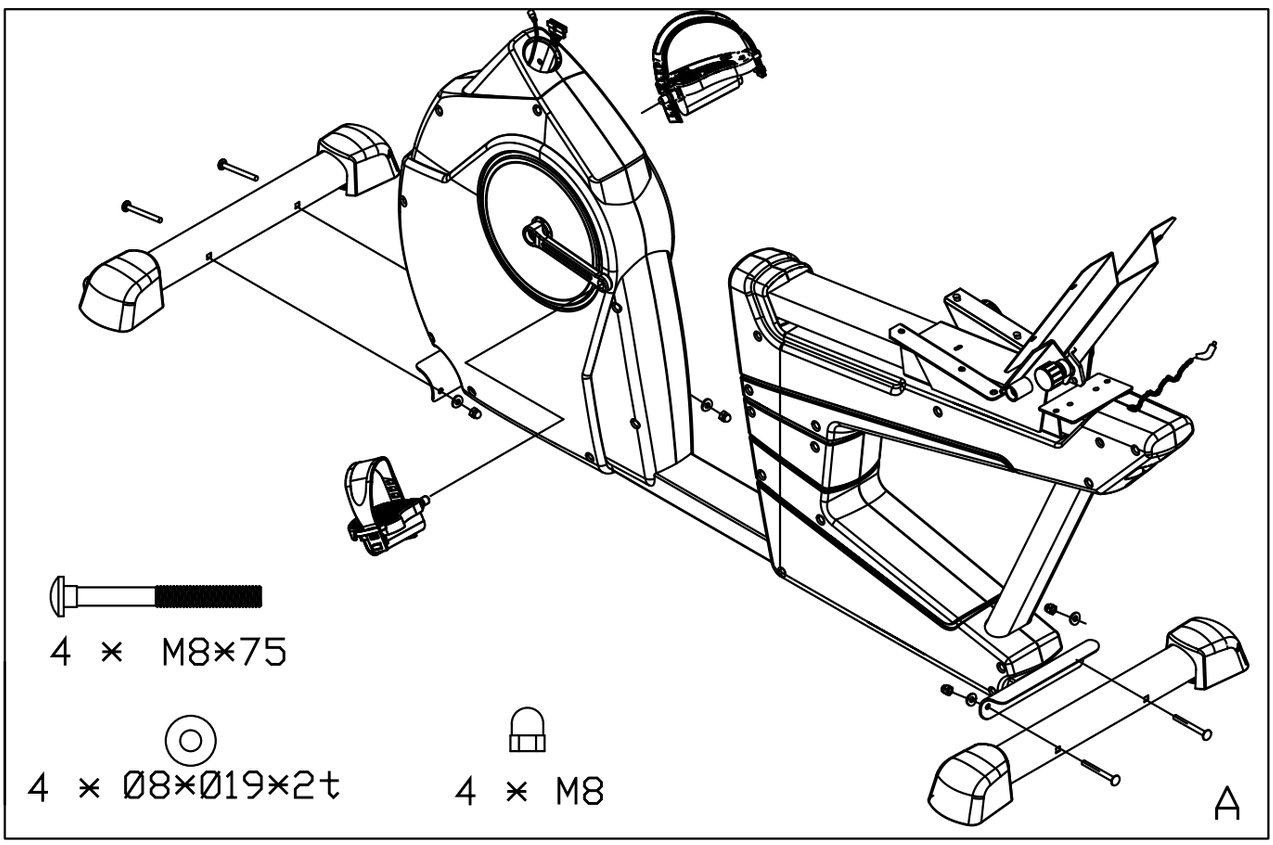
4 * M8*75
4 * Ø8*Ø19*2t
4 * M8
A

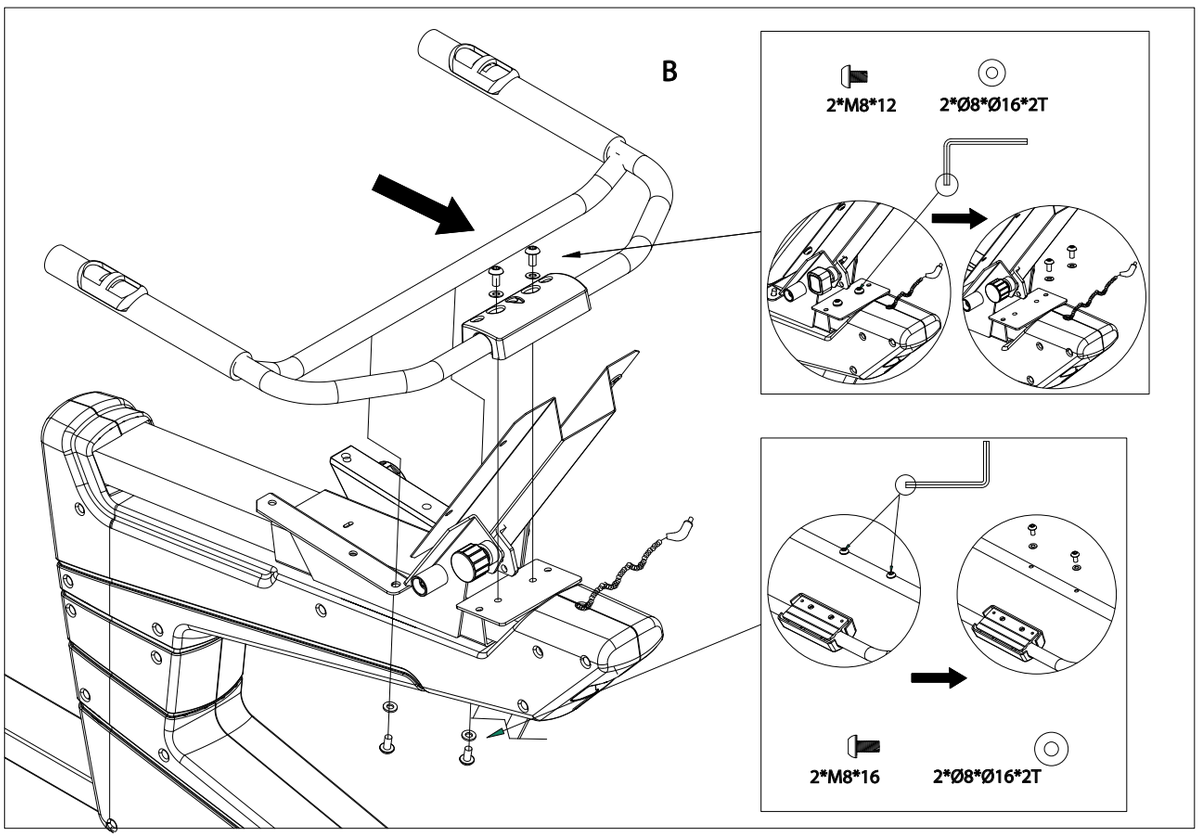
B
2*M8*12
2*Ø8*Ø16*2T
2*M8*16
2*Ø8*Ø16*2T

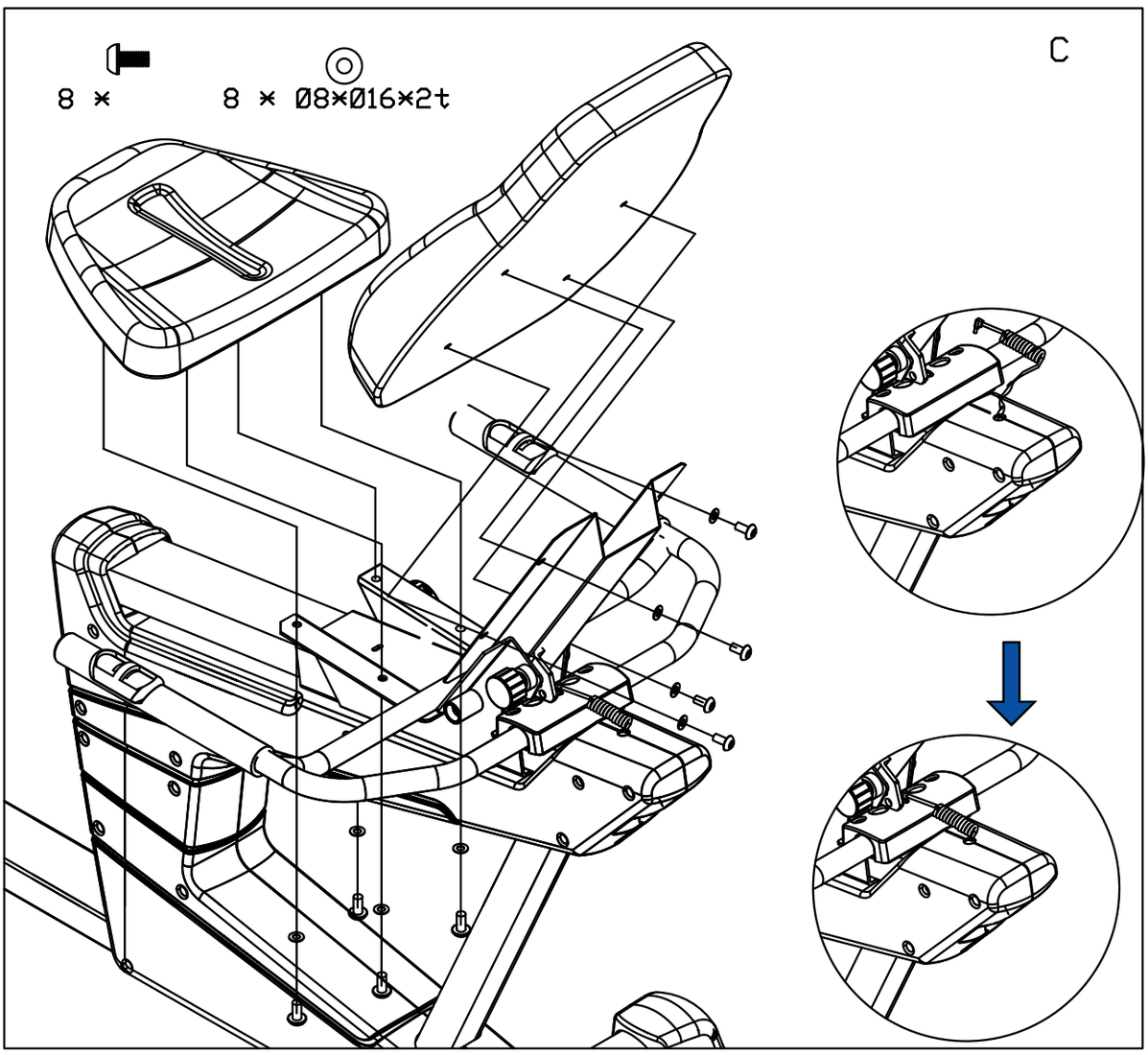
8 x
8 x Ø8xØ16x2t
C

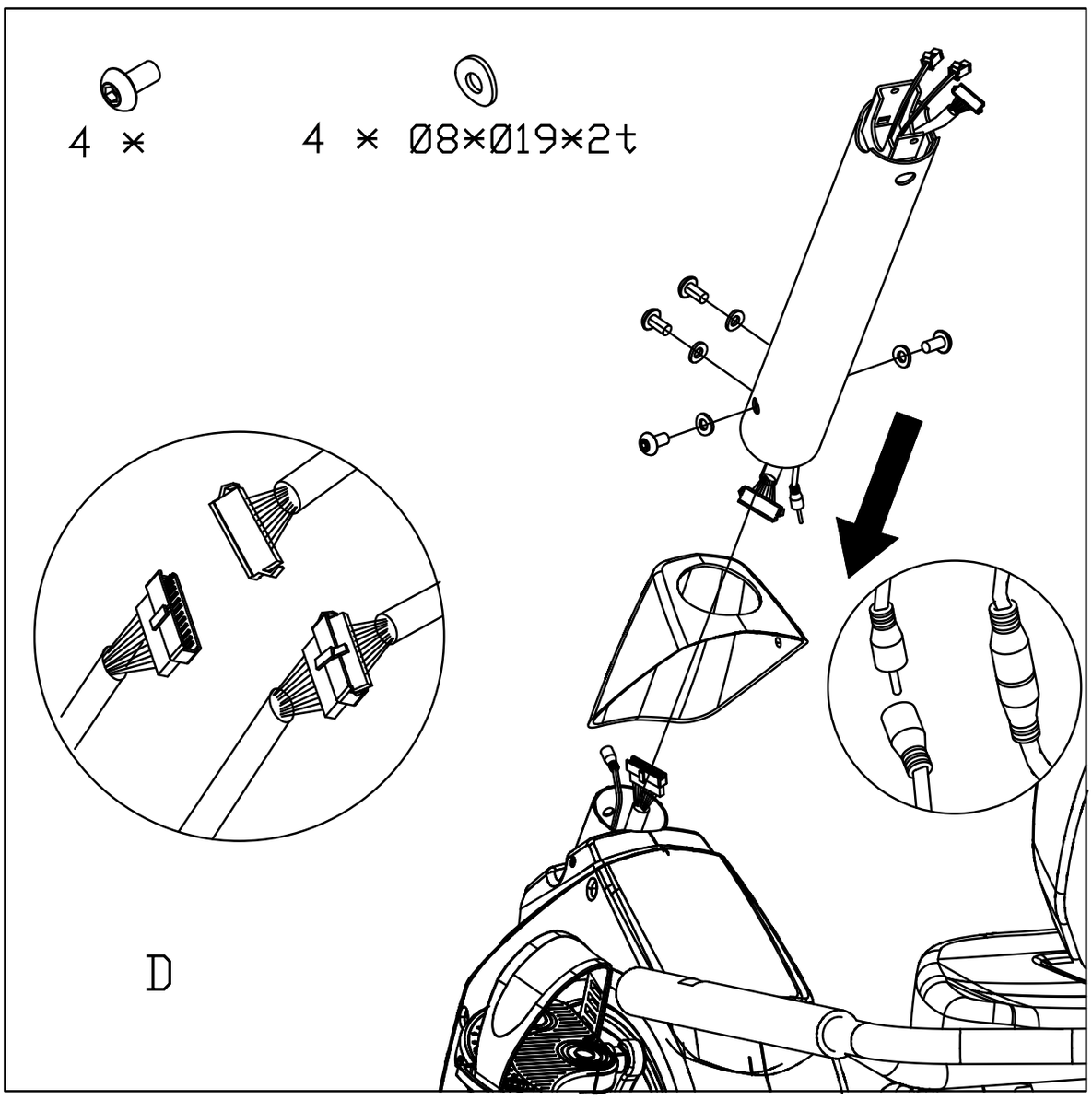
4 x
4 x Ø8xØ19x2t
D

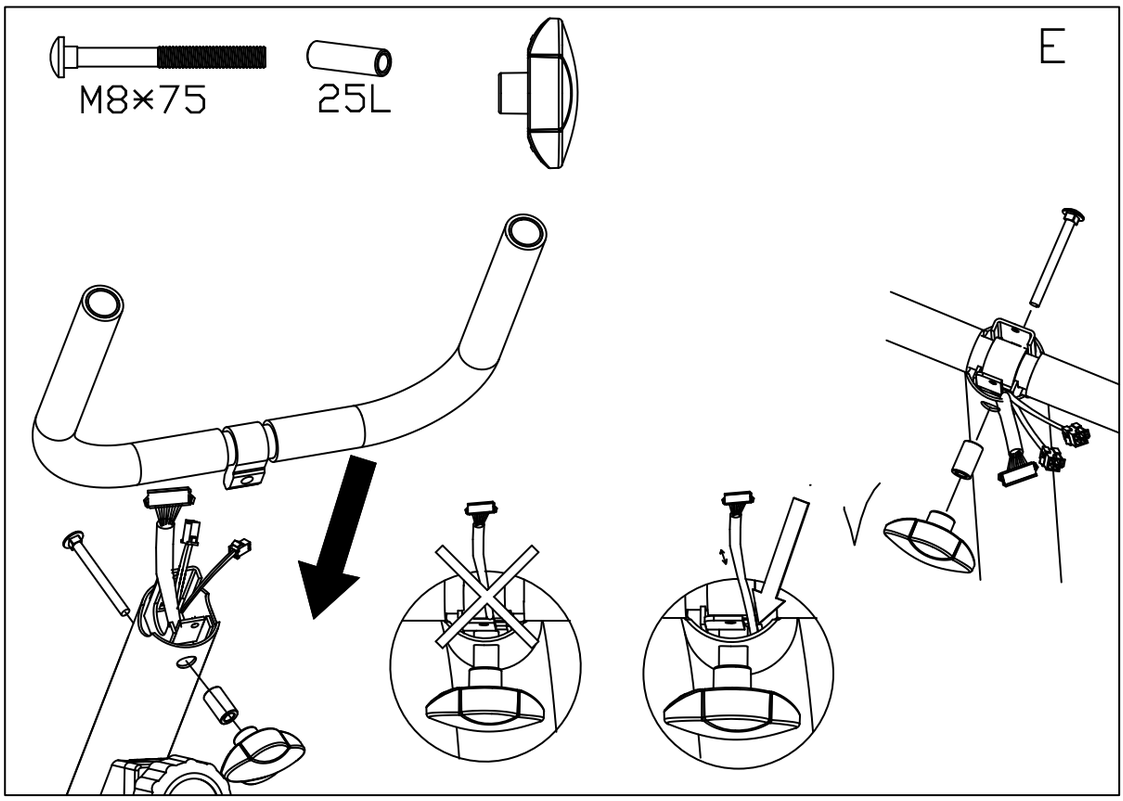
M8×75
25L
E

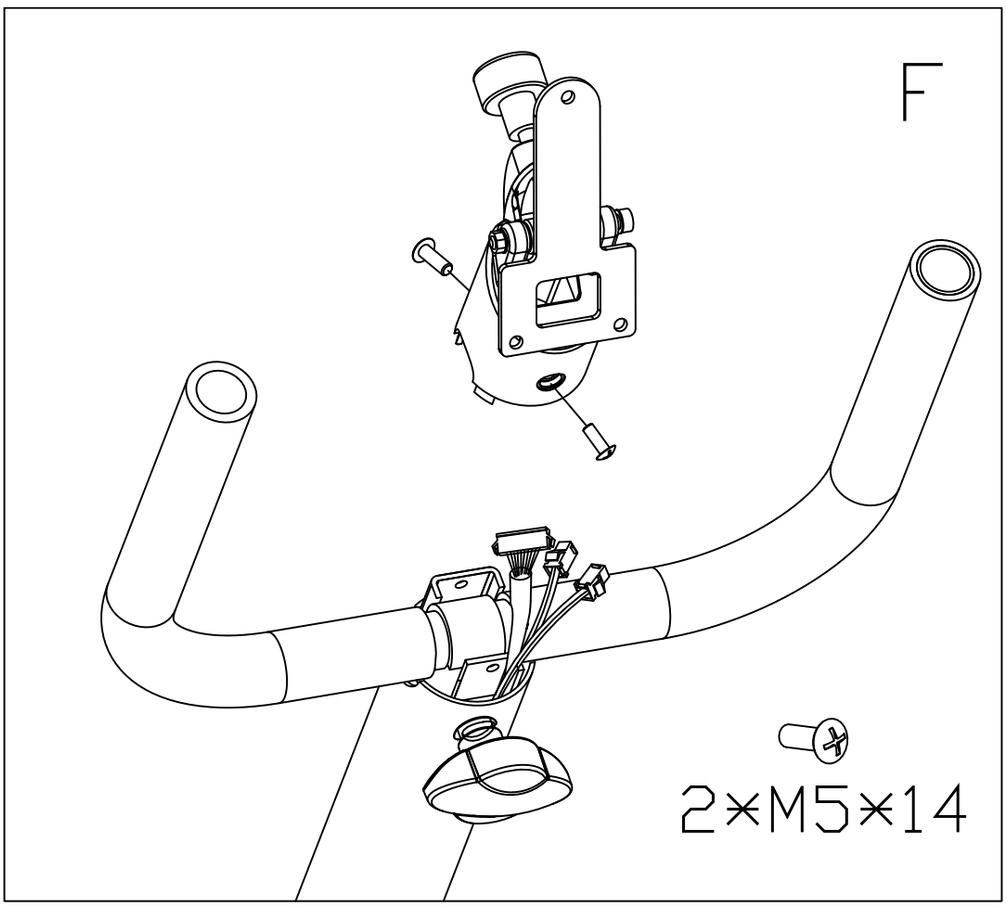
F
2×M5×14

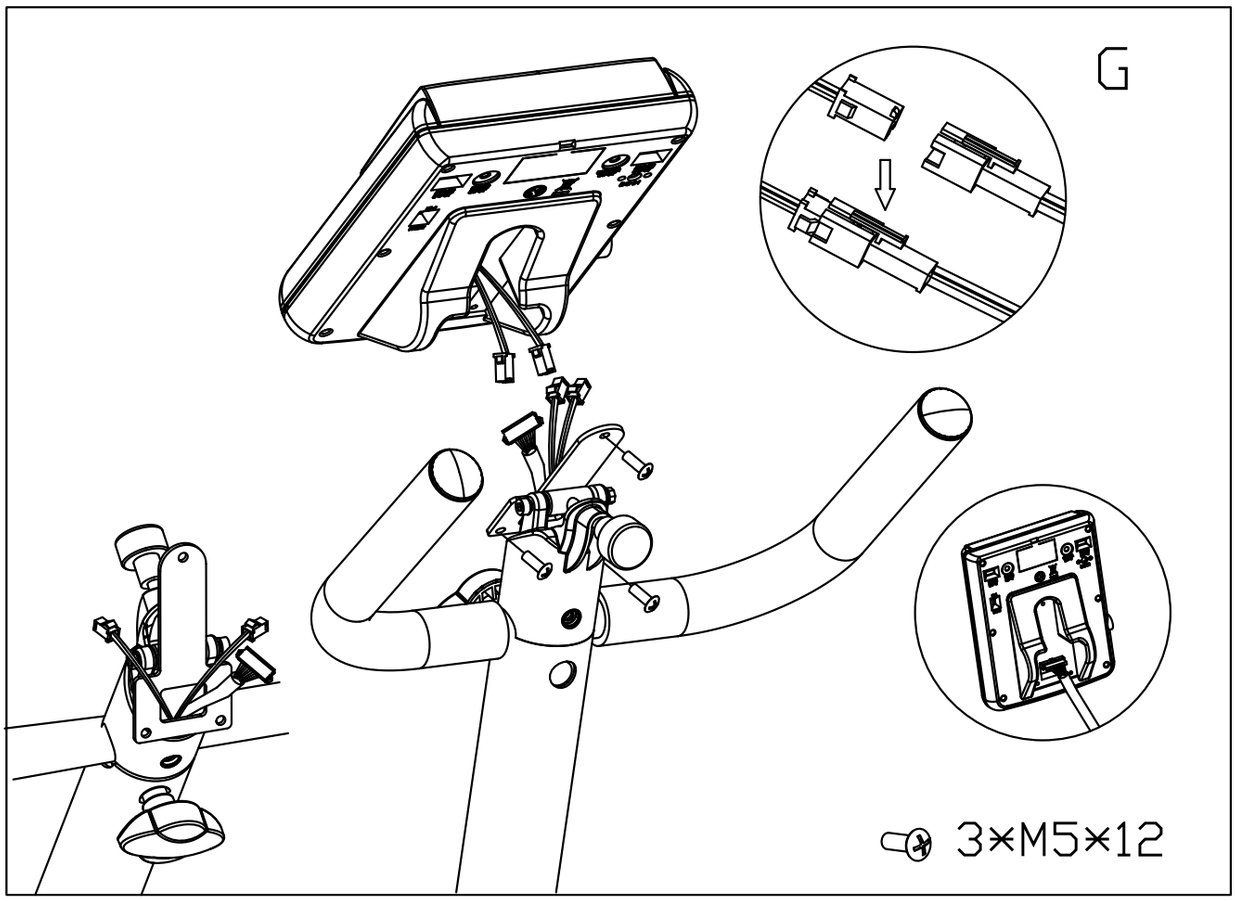
G
3*M5*12

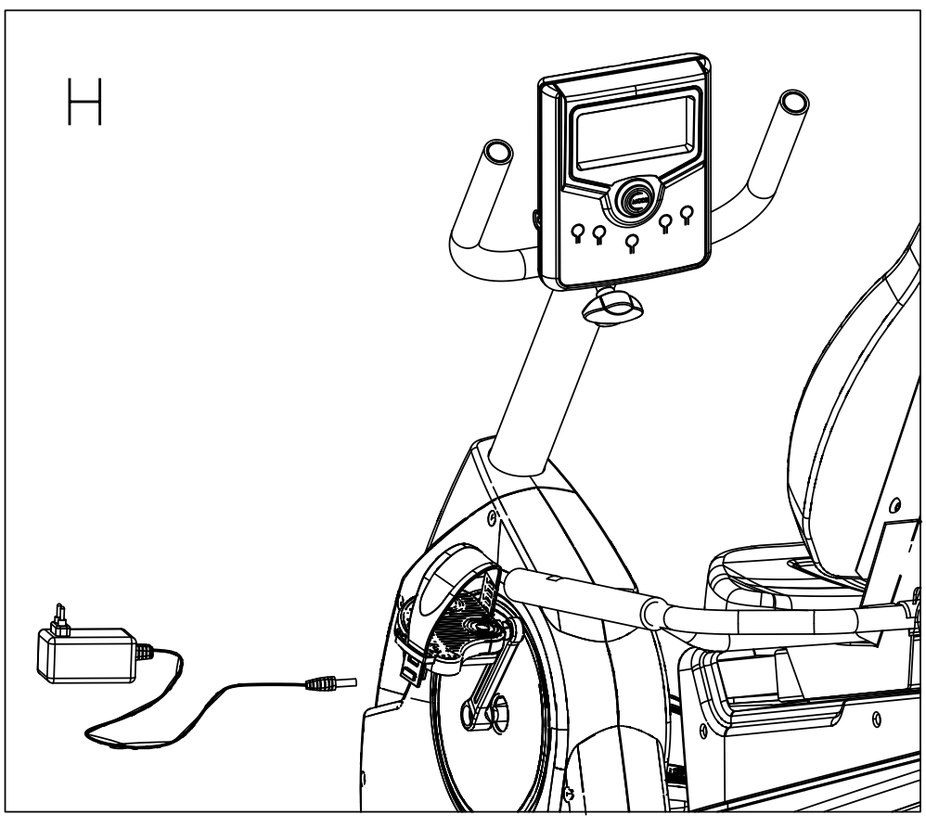
H

1	233 1081 20	Meter	1
2	M5x10 DIN 7985	Screw	3
3	203 9014 20	Front handlebar (incl. 4)	1
4	533 1075 20	End plug for handlebar	2
5	103 1082 20	Meter socket seat	1
6	-	Meter socket knob	1
7	M6x60 DIN 912	Screw	1
8	M6 DIN 125	Flat washer	2
9	-	Sleeve	1
10	503 1032 20	Meter socket (incl. 6, 7, 8, 9, 11)	1
11	M6 DIN 985	Nylon nut	1
12	203 9015 20	Handlebar post	1
13	M8x16 ISO 7380	Screw	4
14	M8 DIN 127	Semi-circle washer	4
15	403 9023	Cable wire, upper	1
16	-	Hand pulse wire, upper	1
17	103 9028 20	Frame	1
18	-	Cable wire, lower	1
19	-	Hand pulse wire, middle	1
20	653 0102	Crank screw + plug	2
21	353 9006 20	Crank L + plug	1
22	353 9005 20	Crank R + plug	1
23	17x1,0 DIN 471	C-clip	1
24	ø18/25x0,3t DIN 988	Flat washer	1
25	653 1034	Curve washer	1
26	523 409 85	Bearing	2
27	M3x8 DIN 7985	Screw	2
28	403 9029	Speed sensor + wire	1
29	263 1011	Drive pulley	1
30	343 9007	Pulley axle	1
31	M8x12 DIN 912	Screw	4
32	443 9004	Belt	1
33	653 1045	Screw	3
34	ø8/16x2t DIN 125	Washer	5
35	M8xP1,25x25L ISO 7380	Screw	2
36	103 1070 20	Front support foot	1
37	533 9031 20	Front foot cover, pair	1
38	ø4,2x19 DIN 7504	Screw	2
39	M8X20 DIN 912	Screw	2
40	533 1101 20	Cushion	2
41	103 9024 20	Rear support foot	1
42	533 9032 20	Rear foot cover, pair	1
43	ø4,2x19 DIN 7504	Screw	2
44	653 1035	Nut	2
45	533 1074	Adjusting cushion	2
46	363 1011 20	Pedal pair + straps	1
47	153 9013 20	Seat base	1
48	503 9015 20	Backrest support	1
49	373 9008 20	Backrest adj. knob	1
50	533 9025	Seat sleeve, front	1
51	533 9026	Seat sleeve, rear	1
52	373 9009 20	Seat adjusting knob	1
53	653 1046	Screw	2
54*	M8X75 DIN 603	Carriage bolt	5
55*	M8 DIN 1587	Nut	4
56*	M8 DIN 127	Semi-circle washer	4
57*	M8X16 ISO 7380	Screw	8
58	M8xP1,25x12L ISO 7380	Screw	2
59*	M8 DIN 125	Washer (* 8 pcs)	10
60*	-	Sleeve	1
61*	533 1097 20	Locking knob (incl. 60, 1x54)	1
62*	M5x14 DIN 7985	Screw	2
63	103 9027 20	Seat rail	1
64	-	Hand pulse wire, middle 2	1
65	503 9016 20	Lift handle	1
66	173 9024 20	Side cover, L	1
67	173 9025 20	Side cover, R	1
68	173 9026 20	Upper cover rear, L	1
69	173 9027 20	Lower cover rear, L	1
70	173 9028 20	Upper cover rear, R	1
71	173 9029 20	Lower cover rear, R	1
72	173 9030 20	Handlebar post cover	1
73	ø4,2x50 DIN 7981	Screw	16
74	ø4,2x19 DIN 7504	Screw	12
75	153 9011 20	Seat	1
76	153 9012 20	Back rest	1
77	203 9011 20	Seat handlebar	1
78	-	Hand pulse wire	2
79	173 9031 20	Seat handlebar cover	1
80	M5x10 DIN 7985	Screw	2
81	213 9005 20	Foam grip	2
82	533 9027 20	End plug for seat handlebar	1
83	403 9030	Hand pulse unit (incl. 16, 19, 64, 78)	1
84	M8X16 ISO 7380	Screw	2
85	M8 DIN 125	Washer	2
86	303 1019	Flywheel complete (incl. 87-97)	1
87	-	One-way bearing set	1
88	-	Bearing 6003RS	1
89	-	Flywheel axle	1
90	-	Washer	1
91	-	Pulley	1
92	-	Bearing 6000RS	1
93	-	Nut	2
94	-	Nut	4
95	-	Sleeve	1
96	-	Bearing 6300RS	1
97	-	Bearing 6203RS	1
98	513 1015	Belt tightener set (incl. 99-105)	1
99	-	Spring	1
100	ø8/16x1t DIN 125	Washer	1
101	M8 DIN 985	Nylon nut	1
102	-	Pulley	1
103	M8x20 DIN 912	Screw	1
104	-	Sleeve	1
105	-	Curve washer	1
106	403 9032	Servo motor assembly set (incl. 18, 107-114, 116)	1
107	-	Sleeve	1
108	-	Bolt	1
109	-	Screw	1
110	-	Washer	1
111	M6xP1,0x16 DIN 933	Screw	2
112	M6 DIN 125	Washer	2
113	M6 DIN 127	Spring washer	2
114	-	Nut	2
115	403 0058 20EU	Adaptor, EU	1
	403 0058 20USA	Adaptor, USA	
	403 0058 20GB	Adaptor, GB	
	403 0058 20AUS	Adaptor, AUS	
116	-	Power wire	1
-	423 9021 20	Label set	1
-	553 9008 20	Hardware kit 1 (incl.*)	1
-	553 9009 20	Hardware kit 2 (incl*)	1
-	583 9009 20	Owner's manual	1
-*	-	Screwdriver	1
-*	-	Allen key	1

Cardio Comfort Pacer 2007_PUBLIS64 64 13.7.2007 11:02:05

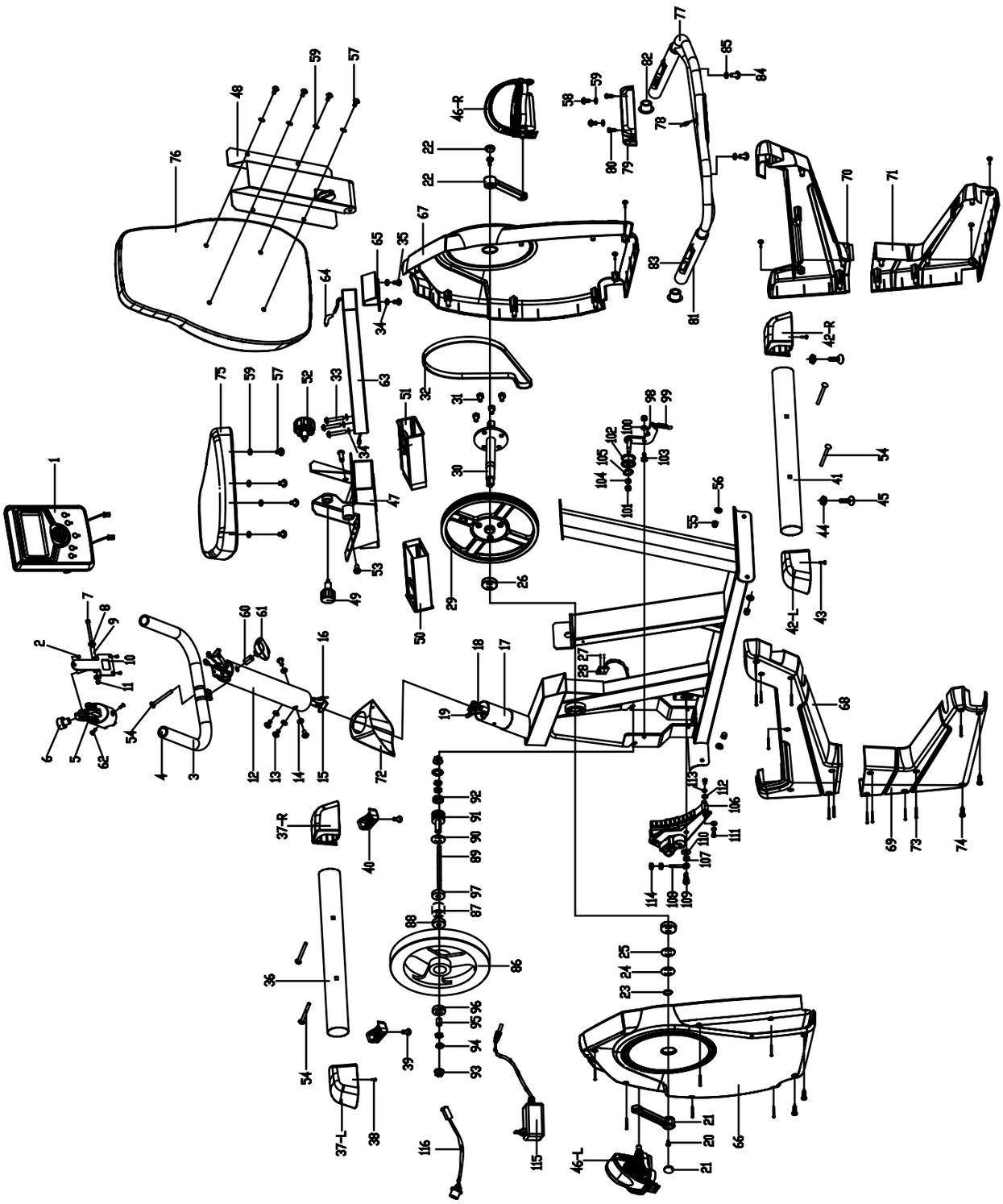

BREMSHEY SPORT®

Austria
Accell Fitness Österreich
Am Messendorfgrund 30
A-8042 Graz
Österreich
Tel: +43 316 716412
Fax: +43 316 716435

Benelux
Accell Fitness Benelux
Koningsbeltweg 51
1329 AE ALMERE
The Netherlands
Tel: +31 36 5460050
Fax: + 31 36 5460055

Finland
Accell Fitness Scandinavia
Varusmestarintie 26
20361 TURKU
Finland
Tel: +358 2513 31
Fax: +358 2513 313

Germany
Accell Fitness Deutschland
P/a Koningsbeltweg 51
1329 AE ALMERE
The Netherlands
Tel: +31 36 5460050
Fax: + 31 36 5460055

United Kingdom
Accell Fitness United Kingdom
Boland House
Nottingham South Industrial Estate
Ruddington Lane
Wilford
Nottingham NG11 7EP
United Kingdom
Tel: +44 115 9822844
Fax: +44 115 9817784

Sweden
Accell Fitness Scandinavia
Varusmestarintie 26
20361 TURKU
Finland
Tel: +358 2513 31
Fax: +358 2513 313

Switzerland
Accell Fitness Schweiz
Altgraben 31
CH-4624 Härlungen SD
Schweiz
Tel: +41 (0)62-3877979
Fax: +41 (0)62-3877970

USA / Canada
Accell Fitness North America Inc.
130 Hayward Ave, Suite 2
N2C 2E4
Kitchener, ON Canada
Tel. 1-888-388-6887
Fax: 1-519-576-2521

www.accellfitness.com

583 9009 20